DOI 10.52209/1609-1825_2022_4_34 UDC 621.65

Modification of the Vane Grille of the Impeller of the Centrifugal Pump

[1]***ISAMETOVA Madina**, Cand. of Tech. Sci., Head of Department, isametova69@mail.ru,*
[1]***AKHMEDOV Khamid**, doctoral student, Junior Researcher, hamid1996_17@mail.ru,*
[2]***NUSSIPALI Rollan,** Senior Lecturer, rollan_n@mail.ru,*
[1]***KERIMZHANOVA Manshuk**, Cand. of Tech. Sci., Professor, cafsstm@mail.ru,*
[3]***DZHASINBEKOV Olzhas**, doctoral student, Leading Specialist, o.dzhsinbekov@ksm.kz,*
[1]NCJSC «Kazakh National Research Technical University named after K.I. Satpayev», Kazakhstan, Almaty, Satpayev Street, 22a,
[2]M.Kh. Dulaty Taraz Regional University, Kazakhstan, Taraz, Suleymenov Street, 7,
[3]Branch of RSE «KazStandart», Kazakhstan, Almaty, Altynsarin Avenue, 83,
**corresponding author.*

***Abstract.** The article deals with the problems of increasing the energy efficiency of vertical centrifugal pumps, and proposes a method for modifying the impellers. To increase the hydraulic efficiency, the option of replacing the traditional homogeneous paddle screen with a variable pitch heterogeneous screen was considered. To substantiate the expediency of applying the modification option, the theory of shockless flow entry into the impeller is presented and analyzed. To automate the calculations of the parameters of a heterogeneous lattice, a module was created in the PYTON environment. The results of an automated calculation of the parameters of a heterogeneous bladed lattice are presented, and the results of fluid flow simulation in two versions of the wheels are presented.*

***Keywords:** energy efficiency, impeller, centrifugal pump, pressure, flow, rotation frequency, vane screen, modification, hydrodynamic calculation, liquid medium.*

Introduction. Centrifugal pumps (CP) are widely used in all industries. And today we have an obvious fact that the energy intensity of pumping equipment is quite high. In various industries, the energy consumption of pumps averages 25-60% of the total power consumed [1]. The distribution of electricity consumption by pumping equipment, according to the European organization of manufacturers of pumping equipment «EuroPump» [2], ranks second after the energy consumption of process equipment. At the same time, almost a third of the energy costs are accounted for by dynamic pumps. Based on the foregoing, it follows that the problem of reducing the cost of energy consumed by pumping equipment is one of the key tasks of technical science. This problem is becoming especially acute today due to a sharp reduction in relatively cheap traditional energy sources.

To date, the following areas of modernization of pumping equipment can be distinguished:

- improvement of the flow part of the pump in order to increase efficiency;
- expansion of the working area for filing;
- reduction of vibration activity of the pump;
- increase in the resource of the front and interstage seals of the impellers due to the use of wear-resistant non-seize materials;
- use of mechanical seals that meet the requirements of the API 682 standard;
- reduction of the axial stroke of the motor rotor [3].

Object of study. The object of modification is a multistage horizontal centrifugal pump (Figure 1). Multi-stage central pumps have some design features: the flow angles from the impeller are small, the speeds are relatively high, and the proportion of high-speed energy conversion attributable to the outlet device is significant, as a result, the hydraulic performance of the stage is reduced.

To modernize impellers, it is necessary to choose a blade system with optimal properties, however, measures that improve one of the parameters most often conflict with the provision of others. At the moment, there is a sufficient amount of scientific research on the modification of the geometry and structure of the impellers, in order to improve the hydraulic performance. The analysis is shown in table 1.

After analyzing the existing directions for the modernization of centrifugal wheels, it was decided to modify the existing paddle grid into a heterogeneous one, that is a grid with a variable pitch. This method will technically allow to stay within the framework of the existing wheel production technology and by

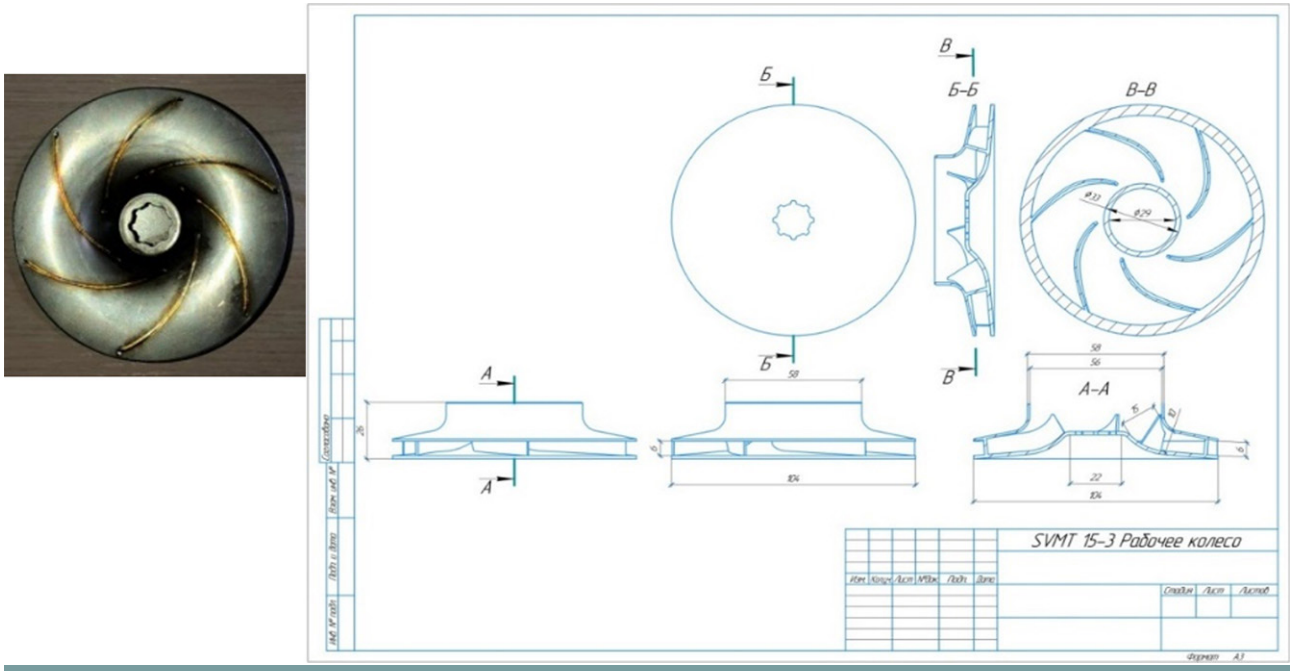

Figure 1 – Pump impeller made of steel grade CTP 15-4

Table 1 – Data on the modification of the impeller blade system

Authors / Признаки	Author 1 [4]	Author 2 [5]	Author 3 [6]	Author 4 [7]
Modification	oramating	bunk grating	heterogeneous with three pairs of blades and the same exit angles	application of hydrophobic coatings on the surface of channels and wheel discs
Advantages	affects the natural frequencies of the wheel, namely increases them	increases the flow rate	does not require modernization of the guide apparatus	channel roughness reduction
Disadvantages	complicates the geometry and manufacturing technology	increases the friction of the flow on the blade	uneven flow along the blades	complexity in the application technology and an increase in the production cycle of wheels

increasing the working area of the pump, to increase the overall integral hydraulic efficiency.

Theoretical foundations of the methodology for calculating variable-pitch blade systems.

The concept of a variable pitch (Figure 2) is based on the ideas of redistribution of predominantly impact losses at the inlet to the blade system throughout the entire impeller.

The implementation of such solutions involves the use of new approaches in the design. In particular, the vane system of the pump is calculated not for one point (Qcalc, Hcalc), but for the required delivery area (Q(Q1, Q2...Qn), H(H1, H2...Hn)).

Thus, formed hydrodynamic grating has different angles of inclination and installation angles. As a result, the working area of the pump expands. In this case, near the optimum ηopt, there may be a local decrease in efficiency, however, its values increase at the boundaries of the calculated feed range Qmin and Qmax. Thus, the average integral efficiency of a pump with a heterogeneous vane system is higher than that of analogues with a classical (homogeneous) vane system [8].

To analyze the reliability of the statement that a heterogeneous lattice reduces impact losses in the pump wheel, we considered the method for calculating impact losses given by the author in [9].

For the projections of absolute velocities on the circumferential direction in terms of the impingement angle and the circumferential direction in terms of the design angle of the blade, we use the following formulas:

- projection of the absolute velocity on the circumferential direction according to the angle of leakage:

$$h_{lf} = \varphi_H \frac{\Delta V_{UH1}^2}{2g}, \quad (1)$$

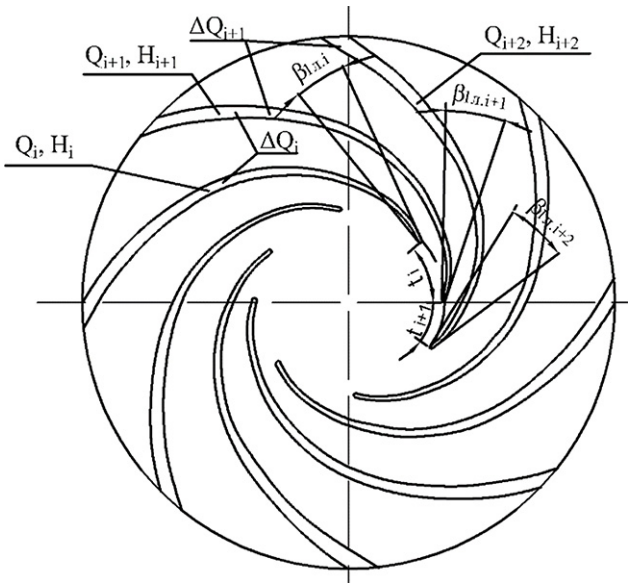

Figure 2 – Scheme for calculating the parameters of a heterogeneous lattice

where h_{if} – loss of flow per impact at the entrance to the wheel;

φ_H – coefficient of shock losses of the impeller grid;

ΔV^2_{UH1} – is the difference in the circumferential components of the absolute velocity when the direction of the flow deviates from its direction in the shockless entry mode.

The following formulas are used for the projections of absolute velocities on the circumferential direction along the angle of impingement and the circumferential direction along the design angle of the blade:

- projection of the absolute velocity on the circumferential direction according to the angle of leakage:

$$V^2_{UH1} = U_{1H} - \frac{\operatorname{ctg}(\beta_{1H})}{2\pi \cdot R_{H1} \cdot b_{H1} \cdot \Psi_{1H}} Q, \qquad (2)$$

where U_{1H} – peripheral speed;

β_{1H} – angle of flow on the blade;

R_{H1} – wheel entry radius;

b_{H1} – wheel channel width at the inlet;

Ψ_{1H} – flow restriction coefficient.

- projection of the absolute velocity onto the circumferential direction along the grating angle:

$$V^2_{UH1Л} = U_{1H} - \frac{\operatorname{ctg}(\beta_{1HЛ})}{2\pi \cdot R_{H1} \cdot b_{H1} \cdot \Psi_{1H}} Q, \qquad (3)$$

where $\beta_{1HЛ}$ – impingement flow angle on the blade at the grating angle.

At a flow rate corresponding to a shockless wheel entry, the difference in the circumferential velocity components is:

$$\Delta V^0_{UH1} = V^0_{UH1} - V^0_{UH1Л} = \\ = \left(\frac{\operatorname{ctg}(\beta^0_{1H})}{2\pi \cdot R_{H1} \cdot b_{H1} \cdot \Psi_{1H}} - \frac{\operatorname{ctg}(\beta_{1HЛ})}{2\pi \cdot R_{H1} \cdot b_{H1} \cdot \Psi_{1H}} \right) Q_0, \qquad (4)$$

where Q_0 – constant flow rate for fixed torque values.

On the figure 3 we will study the following flow model in velocity triangles.

Figure 3 shows that the total difference consists of three terms:

$$\Delta V^2_{UH1} = V'_{UH1} + V''_{UH1} + V^0_{UH1}. \qquad (5)$$

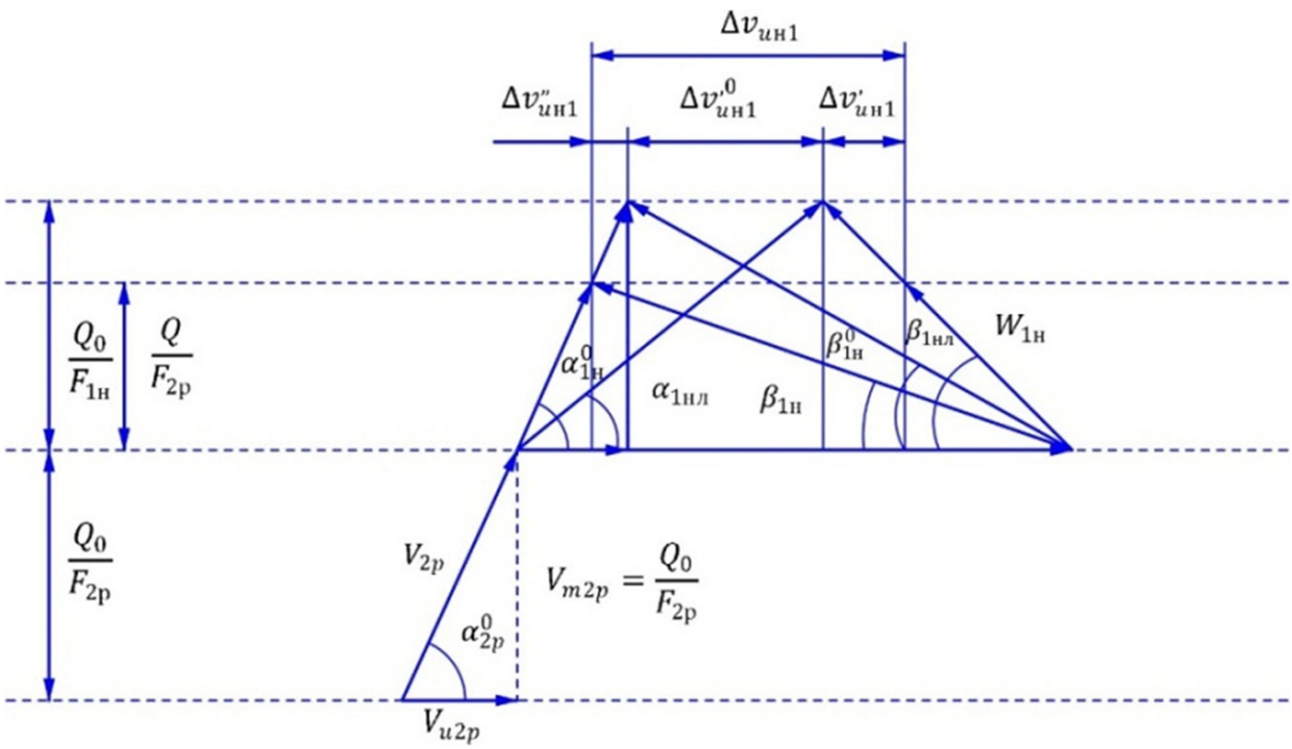

Figure 3 – Flow model in velocity triangles for the impeller system

We defined:

$$\Delta V'_{UH1} = \frac{\operatorname{ctg}(\beta_{1H})}{2\pi \cdot R_{H1} \cdot b_{H1} \cdot \Psi_{1H}}(Q_0 - Q), \quad (6)$$

$$\Delta V''_{UH1} = \frac{\operatorname{ctg}(\alpha_{2P\text{л}})}{2\pi \cdot R_{H1} \cdot b_{P2} \cdot \Psi_{2P}}(Q - Q_0). \quad (7)$$

Given the ratio:

$$V^2_{UH1} = \frac{R_{P2}}{R_{H1}} V_{UP2} = \frac{R_{P2}}{R_{H1}} \frac{\operatorname{ctg}(\alpha_{2P\text{л}})}{2\pi \cdot R_{P2} \cdot b_{P2} \cdot \Psi_{2P}} Q = \frac{\operatorname{ctg}(\alpha_{2P\text{л}})}{2\pi \cdot R_{H1} \cdot b_{P2} \cdot \Psi_{2P}} Q. \quad (8)$$

Finally:

$$\Delta V^2_{UH1} = 2g(LQ + KQ_0)^2 = 2g(Le^{-x} + K)^2 Q_0^2.$$

Then the expression for the loss function:

$$h_{lf} = \varphi_H \frac{\Delta V^2_{UH1}}{2g} = \varphi_H (Le^{-x} + K)^2 Q_0^2. \quad (9)$$

If we analyze expression (9), we can conclude that the impact loss function quadratically depends on the value of the circumferential component of the absolute speed v_u, where one of the components of this value at a flow rate corresponding to the shock-free turbine entry is the difference between the circumferential velocity components at the wheel entry, By reducing the angle of installation of the blade, and accordingly the pitch, one can note the tendency of the value h_{lf} to a minimum.

Automation of the design of a centrifugal wheel with a heterogeneous bladed lattice in the PYTON mathematical environment.

To reduce the design time for an impeller with a heterogeneous blade array, eliminate errors in calculations and improve the accuracy of constructing the geometry of three blades with different curvature, an automated module was created in the PYTON environment.

The algorithm of the automated module for determining the geometric parameters was based on the classical calculations of a wheel with a periodic blade array according to the methods [10] and the algorithm for calculating the parameters of a heterogeneous array, where the results will be the angles of the blades, i.e. the angles of the liquid β_1, and the exit angles β_2, and the pitch of the blade t.

The initial data for calculating the main design parameters of the pump are the values of the required pump head H, the pump flow Q, the shaft speed of the centrifugal multistage pump n, as well as the initial approximations of the design parameters obtained by the approximate method [10], [11], [12] of calculation main design parameters. To calculate the parameters of a heterogeneous paddle array, a cycle is introduced according to the pressure and feed values, which are determined from the condition of expanding the feed zone by $Q_i = (0.75;1.25;1.5)Q_{nom}$, iterations are performed according to the formulas for calculating the main parameters of the wheel.

Figure 4 shows a dialog box with the results of an automated calculation of the parameters of a wheel with a heterogeneous lattice.

The automated module allows you to import Cartesian coordinates (x; y) of the blade curvature into any 3D CAD system. To perform this function, the program algorithm contains an operator for converting a cylindrical coordinate system into a Cartesian one.

According to the range of feed variation, according

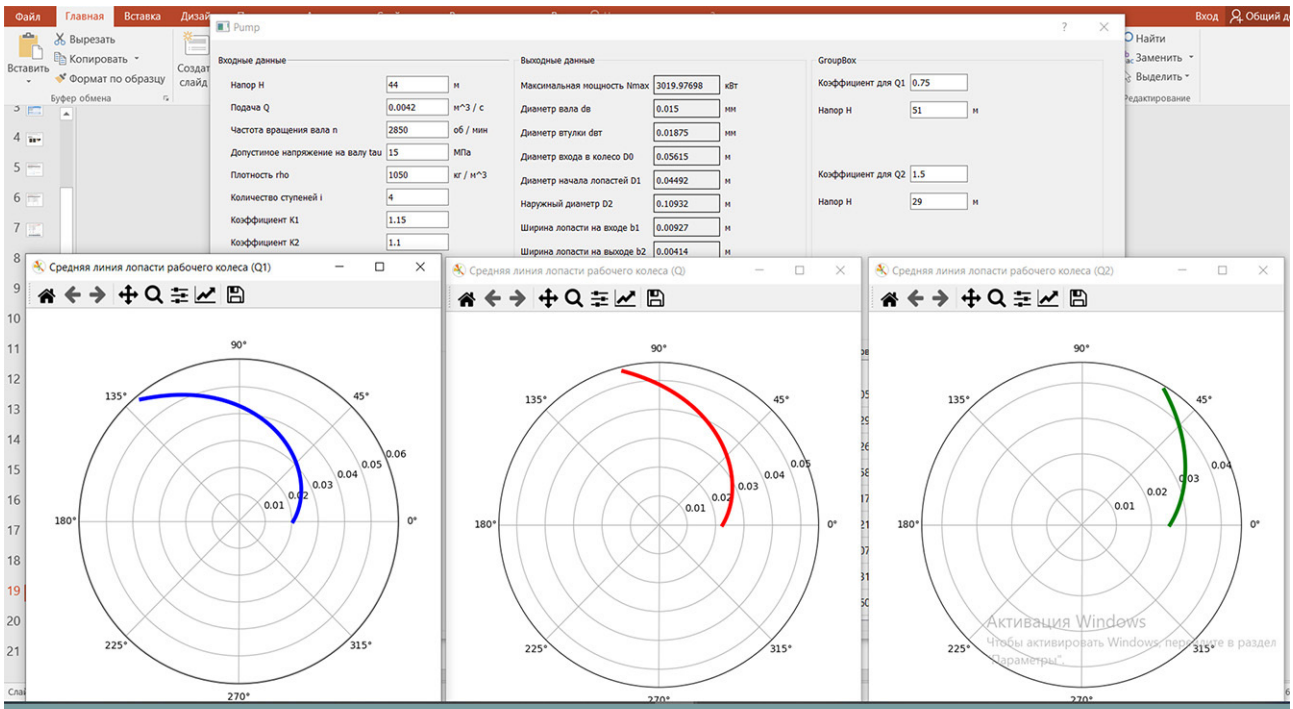

Figure 4 – Program window with calculation results

to industrial tests, according to the Q-H curve of characteristics (Figure 5), the heads and geometric parameters of the three blades of a heterogeneous grid were determined, the data are summarized in Table 2.

Based on the results of the calculation, the first digital model of a centrifugal wheel with a variable pitch grid of blades was built (Figure 6).

Simulation and modeling of flow movement in the SFlow system, checking pump components for strength, durability.

To determine the hydraulic and kinematic characteristics of the modified impeller with a heterogeneous lattice, a new geometry of the impeller was modeled in SFlow and compared with the results of the calculation of the existing impeller. The simulation results are shown in figures 7, 8.

The analysis of the results showed that the diagrams in figures 7, 8 prove the trend of flow equalization for the modified wheel than for the existing factory one. The influence of a heterogeneous lattice can be characterized as a tendency to increase the pressure indicators and a smooth increase in the relative speed along the blades, so the maximum pressure in the factory wheel is P_{max}=35178.23 Pa, the flow rate is W=15.05 m/s, and for the modified wheel these indicators are P_{max}=42718.23 Pa, flow velocity W=16.73 m/s.

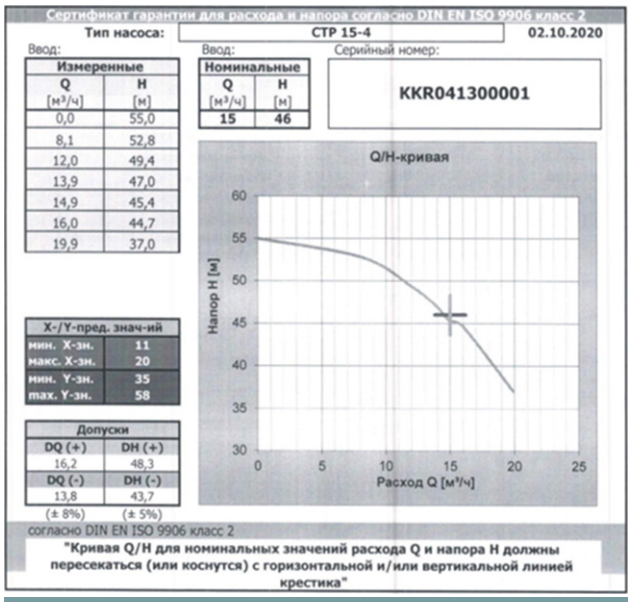

Figure 5 – Test report

Conclusions

1. The conducted complex of scientific researches of modern directions of modernization of dynamic pumps allows us to conclude that the most promising direction is the replacement of a homogeneous blade array with a heterogeneous one, which will lead to an increase in the integral hydraulic efficiency.

2. The impact loss function quadratically depends on the magnitude of the circumferential component of the absolute speed, increasing the angle of installation of the blade, and, accordingly, the pitch, it can be noted that the value of the impact loss function tends to a minimum.

3. Based on the classical methods of hydrodynamic calculation of the parameters of centrifugal wheels, a method was developed for designing wheels with a heterogeneous vane array, capturing the expansion of the pump working area from $0.7Q_{nom}$ to $1.5Q_{nom}$.

4. On the basis of the developed theoretical calculation algorithms, a block diagram and an automated module were created for calculating the parameters of a wheel with a modified heterogeneous blade array.

5. The simulation of the flow in two versions of the wheels showed the following results: in the factory wheel it is P_{max}=35178.23 Pa, the flow rate is W=15.05 m/s and for the modified wheel these indicators are P_{max}=42718.23 Pa, the flow rate is W=16.73 m/s.

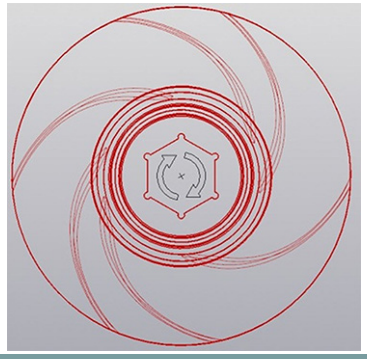

Figure 6 – Digital model of a wheel with a heterogeneous lattice

Table 2 – Calculated data of the geometric characteristics of a heterogeneous vane array

	minQ	0,7Q	1Q	1,2Q	1,5Q
Q, m³/day	8	10	15	18	23
H, m	53	51,5	46	41	29
b_1, m	0,021	0,023	0,028	0,03	0,035
b_2, m	0,006	0,005	0,008	0,009	0,002
β_1, in degrees	25,3	26,2	27,3	27,8	30,2
β_2, in degrees	18,4	19,1	19,9	20,3	22

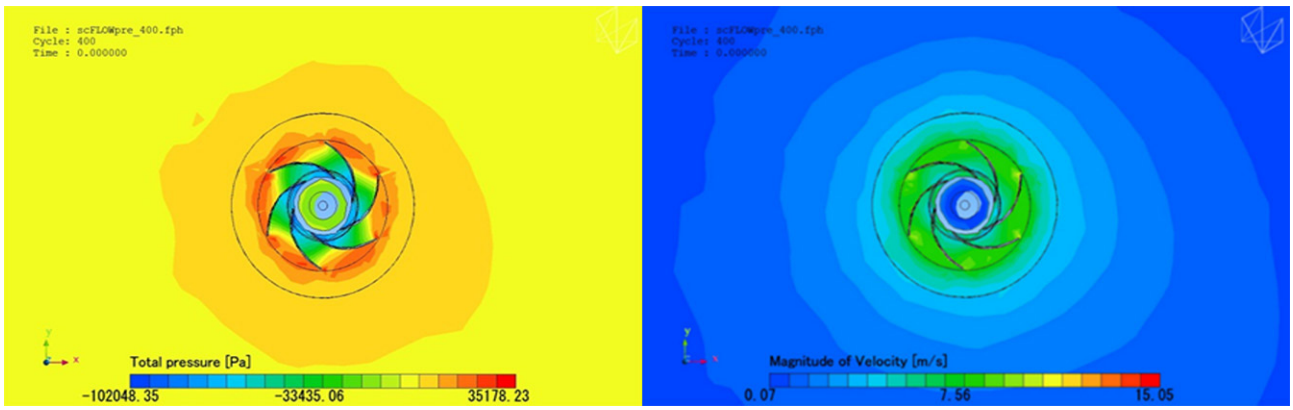

a b

a) pressure distribution; b) flow velocity distribution in the existing wheel

Figure 7 – Calculation diagrams

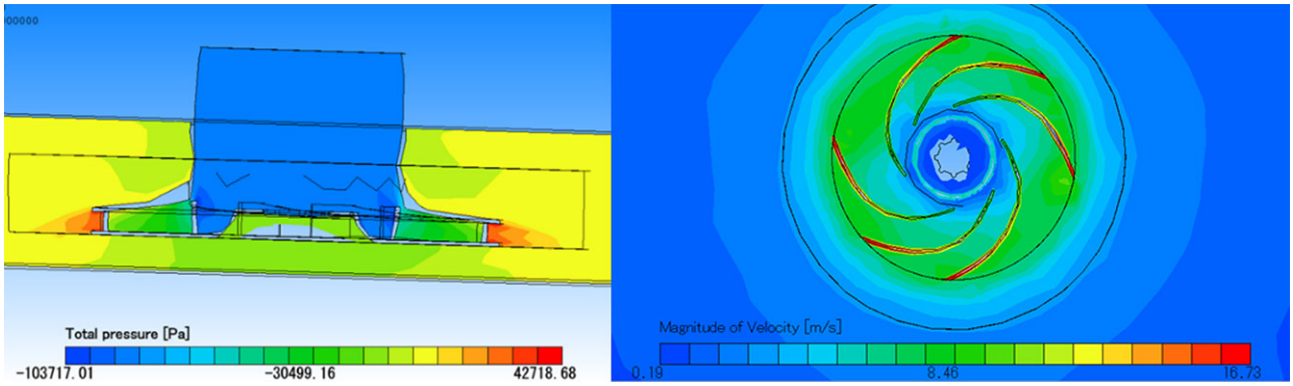

a b

a) pressure distribution; b) flow velocity distribution in the modified wheel

Figure 8 – Calculation diagrams

REFERENCES

1. Stel H., Sirino T., Ponce FJ., Numerical investigation of the flow in a multistage electric submersible pump. J Petrol Sci Eng. 2015. No. 136. pp. 41-54. DOI: https://doi.org/10.1016/j.petrol.2015.10.038
2. Korkmaz E., Golcu M., Kurbanoglu, C.. Effects of Blade Discharge Angle, Blade Number and Splitter Blade Length. Journal of applied fluid mechanics. 2017. No. 10. pp. 529-540. DOI: https://doi.org/10.18869/acadpub.jafm.73.239.26056.
3. Liu H. Effects of Blade Number on Characteristics of Centrifugal Pumps. Chinese Journal of Mechanical Engineering. 2010. DOI: https://doi.org/10.3901/CJME.2010.06.742.
4. Bai Y., Kong F., Xia B., & Liu Y. Effect of blade number matching of impeller and diffuser in high-speed rescue pump. Advances in Mechanical Engineering. 2017. Vol. 9. DOI: https://doi.org/10.1177/1687814017703595
5. Malyushenko, VV Determination of the optimal number of impeller blades for feed pumps. // Proceedings of universities. Ser. Energy. – 1964. – No. 4. – pp. 58-65.
6. Onari M.M., & Arzani V.G. Repetitive Shaft Crack Failure Analysis on a Multistage Centrifugal Pump In Reactor Charge Service In A Nuclear Power Plant – Based On ODS And FEA. 43rd Turbomachinery & 30th Pump Users SymposiaTurbomachinery Laboratories, Texas A&M Engineering Experiment Station. 2014. DOI: https://doi.org/10.21423/R1D34J
7. Zhou L., Shi W., & Wu S. Performance Optimization in a Centrifugal Pump Impeller by Orthogonal Experiment and Numerical Simulation. Advances in Mechanical Engineering. 2013. Vol. 5. doi: https://doi.org/10.1155/2013/385809
8. Farah E., Selamat F., Iskandar W., Izhan W. Design and Analysis of Centrifugal Pump Impeller for Performance Enhancement. Journal of Mechanical Engineering (UiTM). 2018. Vol. 5. No. 2. pp. 36-53. Available at: https://www.researchgate.net/publication/324690069
9. Tamin M., Hamzah M. Fatigue Failure Analysis of a Centrifugal Pump Shaft. 2017. P. 1-14. DOI: https://dx.doi.org/10.5772/intechopen.70672
10. Kuznetsov A.V., Panaiotti S.S., Saveliev A.I. Automated design of a multistage centrifugal pump / Tutorial. – Kaluga, 2013. – 170 p.
11. Kuzmenko M.L., Chigrin V.S., Belova S.E. Static strength of rotor blades and disks of compressors and turbines of GTE: Textbook. Rybinsk: RGATA, 2005. 74 p.

12. Lokalov G.A., Markovsky V.M. Axial and centrifugal pumps of thermal power stations: a tutorial. Yekaterinburg: Ural University Press, 2016. 140 p.

Жетілдірілген қалақты торы бар ортадан тепкіш сорғының жұмысшы дөңгелегін жобалауды автоматтандыру

[1]***ИСАМЕТОВА Мадина Есдаулетовна,** *т.ғ.к., кафедра меңгерушісі, isametova69@mail.ru,*
[1]**АХМЕДОВ Хамид Ахмедович,** *докторант, кіші ғылыми қызметкер, hamid1996_17@mail.ru,*
[2]**НУСІПӘЛИ Роллан Карсонұлы,** *аға оқытушы, rollan_n@mail.ru,*
[1]**КЕРІМЖАНОВА Мәншүк Фазылқызы,** *т.ғ.к., профессор, cafsstm@mail.ru,*
[3]**ДЖАСИНБЕКОВ Олжас Әлібекұлы,** *докторант, жетекші маман, o.dzhsinbekov@ksm.kz,*
[1]*«Қ.И. Сәтбаев атындағы Қазақ ұлттық техникалық зерттеу университеті» КеАҚ, Қазақстан, Алматы, Сәтбаев көшесі, 22а,*
[2]*М.Х. Дулати атындағы Тараз өңірлік университеті, Қазақстан, Тараз, Сүлейменов көшесі, 7,*
[3]*«ҚазСтандарт» РМК филиалы, Қазақстан, Алматы, Алтынсарин даңғылы, 83,*

**автор-корреспондент.*

Аңдатпа. *Мақалада динамикалық сорғылардың энергия тиімділігін арттыру мәселелері қарастырылған және жұмысшы дөңгелектерді жетілдіру әдістемесі ұсынылған. Гидравликалық пайдалы әсер коэффициентін арттыру үшін дәстүрлі біртекті қалақшалы торын гетерогенді торға ауыстыру мүмкіндігі қарастырылды. Жетілдірілген нұсқасын қолданудың орындылығын негіздеу үшін ағынның доңғалаққа соққысыз кіру теориясы келтірілген және талданған. Гетерогенді тордың параметрлерін автоматтандыру үшін PYTON ортасында модуль құрылды. Біртекті емес қалақ массивінің параметрлерін автоматтандырылған есептеу нәтижелері берілген, дөңгелектердің екі нұсқасында сұйықтық ағынын модельдеу нәтижелері келтірілген.*

Кілт сөздер: *энергия тиімділігі, жұмыс дөңгелегі, орталықтан тепкіш сорғы, қысым, шығыны, айналу жиілігі, қалақша тор, модификация, гидродинамикалық есептеу, сұйық орта.*

Модификация лопастной решетки рабочего колеса центробежного насоса

[1]***ИСАМЕТОВА Мадина Есдаулетовна,** *к.т.н., зав. кафедрой, isametova69@mail.ru,*
[1]**АХМЕДОВ Хамид Ахмедович,** *докторант, младший научный сотрудник, hamid1996_17@mail.ru,*
[2]**НУСІПӘЛИ Роллан Карсонұлы,** *старший преподаватель, rollan_n@mail.ru,*
[1]**КЕРИМЖАНОВА Маншук Фазыловна,** *к.т.н., профессор, cafsstm@mail.ru,*
[3]**ДЖАСИНБЕКОВ Олжас Алибекович,** *докторант, ведущий специалист, o.dzhsinbekov@ksm.kz,*
[1]*НАО «Казахский национальный исследовательский технический университет имени К.И. Сатпаева», Казахстан, Алматы, ул. Сатпаева, 22а,*
[2]*Таразский региональный университет имени М.Х. Дулати, Казахстан, Тараз, ул. Сулейменова, 7,*
[3]*Филиал РГП «КазСтандарт», Казахстан, Алматы, пр. Алтынсарина, 83,*

**автор-корреспондент.*

Аннотация. *Рассмотрены проблемы повышения энергоэффективности вертикальных центробежных насосов, предложена методика модификации рабочих колес. Для повышения гидравлического КПД рассмотрен вариант замены традиционной гомогенной лопастной решетки на гетерогенную решетку с переменным шагом. Для обоснования целесообразности применения варианта модификации приведена и проанализирована теория безударного входа потока в рабочее колесо. Для автоматизации расчетов параметров гетерогенной решетки создан модуль в среде PYTON. Приведены результаты автоматизированного расчета параметров гетерогенной лопастной решетки, приведены результаты симуляции потока жидкости в двух вариантах исполнения колес.*

Ключевые слова: *энергоэффективность, рабочее колесо, центробежный насос, напор, подача, частота вращения, лопастная решетка, модификация, гидродинамический расчет, жидкая среда.*

REFERENCES

1. Stel H., Sirino T., Ponce FJ., Numerical investigation of the flow in a multistage electric submersible pump. J Petrol Sci Eng. 2015. No. 136. pp. 41-54. DOI: https://doi.org/10.1016/j.petrol.2015.10.038
2. Korkmaz E., Golcu M., Kurbanoglu, C.. Effects of Blade Discharge Angle, Blade Number and Splitter Blade Length. Journal of applied fluid mechanics. 2017. No. 10. pp. 529-540. DOI: https://doi.org/10.18869/acadpub.jafm.73.239.26056.
3. Liu H. Effects of Blade Number on Characteristics of Centrifugal Pumps. Chinese Journal of Mechanical Engineering. 2010. DOI: https://doi.org/10.3901/CJME.2010.06.742.
4. Bai Y., Kong F., Xia B., & Liu Y. Effect of blade number matching of impeller and diffuser in high-speed rescue pump. Advances in Mechanical Engineering. 2017. Vol. 9. DOI: https://doi.org/10.1177/1687814017703595
5. Malyushenko, VV Determination of the optimal number of impeller blades for feed pumps. // Proceedings of universities. Ser. Energy. – 1964. – No. 4. – pp. 58-65.
6. Onari M.M., & Arzani V.G. Repetitive Shaft Crack Failure Analysis on a Multistage Centrifugal Pump In Reactor Charge Service In A Nuclear Power Plant – Based On ODS And FEA. 43rd Turbomachinery & 30th Pump Users SymposiaTurbomachinery Laboratories, Texas A&M Engineering Experiment Station. 2014. DOI: https://doi.org/10.21423/R1D34J
7. Zhou L., Shi W., & Wu S. Performance Optimization in a Centrifugal Pump Impeller by Orthogonal Experiment and Numerical Simulation. Advances in Mechanical Engineering. 2013. Vol. 5. doi: https://doi.org/10.1155/2013/385809
8. Farah E., Selamat F., Iskandar W., Izhan W. Design and Analysis of Centrifugal Pump Impeller for Performance Enhancement. Journal of Mechanical Engineering (UiTM). 2018. Vol. 5. No. 2. pp. 36-53. Available at: https://www.researchgate.net/publication/324690069
9. Tamin M., Hamzah M. Fatigue Failure Analysis of a Centrifugal Pump Shaft. 2017. P. 1-14. DOI: https://dx.doi.org/10.5772/intechopen.70672
10. Kuznetsov A.V., Panaiotti S.S., Saveliev A.I. Automated design of a multistage centrifugal pump / Tutorial. – Kaluga, 2013. – 170 p.
11. Kuzmenko M.L., Chigrin V.S., Belova S.E. Static strength of rotor blades and disks of compressors and turbines of GTE: Textbook. Rybinsk: RGATA, 2005. 74 p.
12. Lokalov G.A., Markovsky V.M. Axial and centrifugal pumps of thermal power stations: a tutorial. Yekaterinburg: Ural University Press, 2016. 140 p.